RADIATOR 204116B / 28″ x 16″ / 3 Row

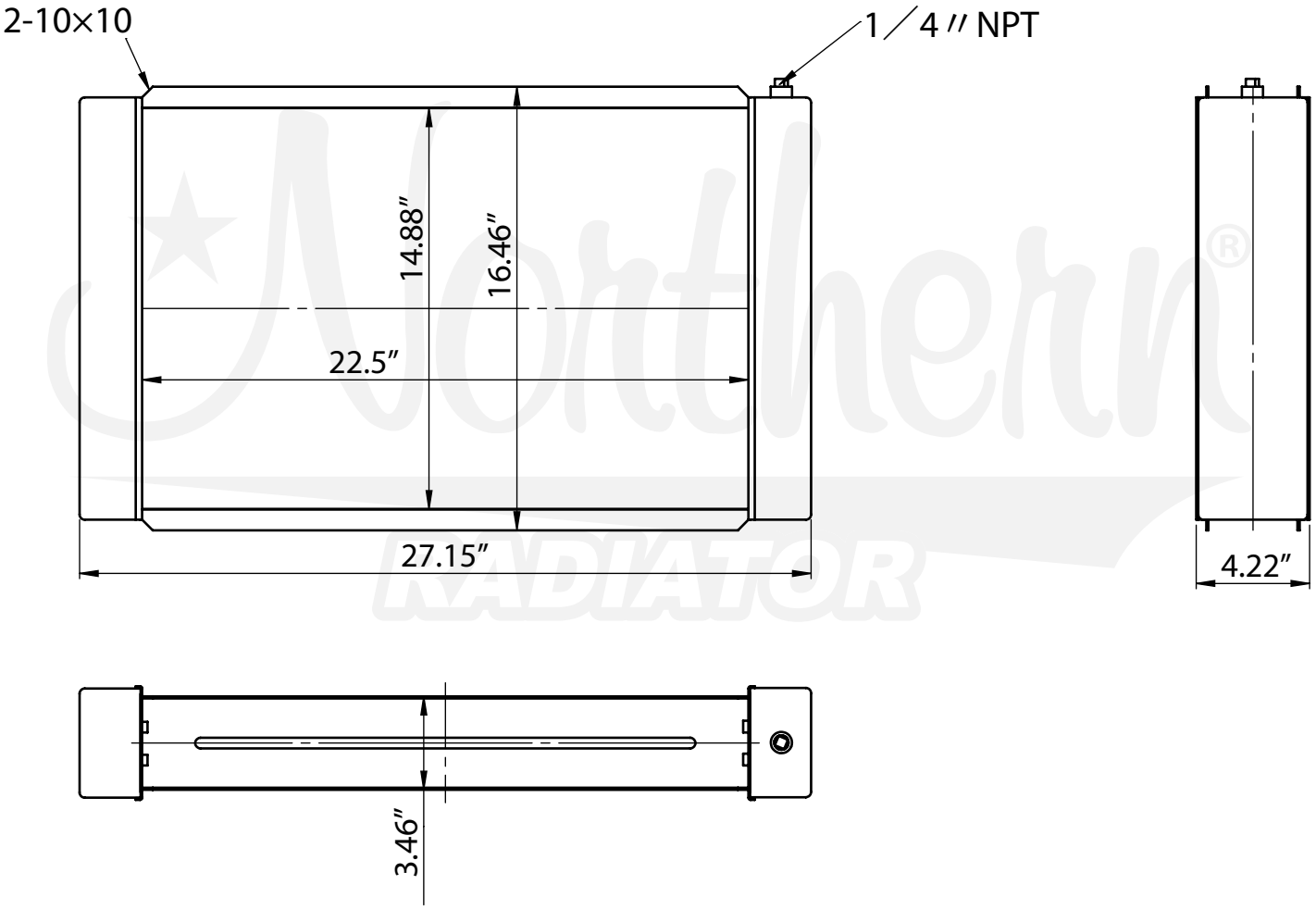

© Northern Factory Sales, Inc. 2017, All Rights Reserved. • www.NorthernFactory.com